PL-1RT POWERLOCK™ REEL TRAILER SPECS

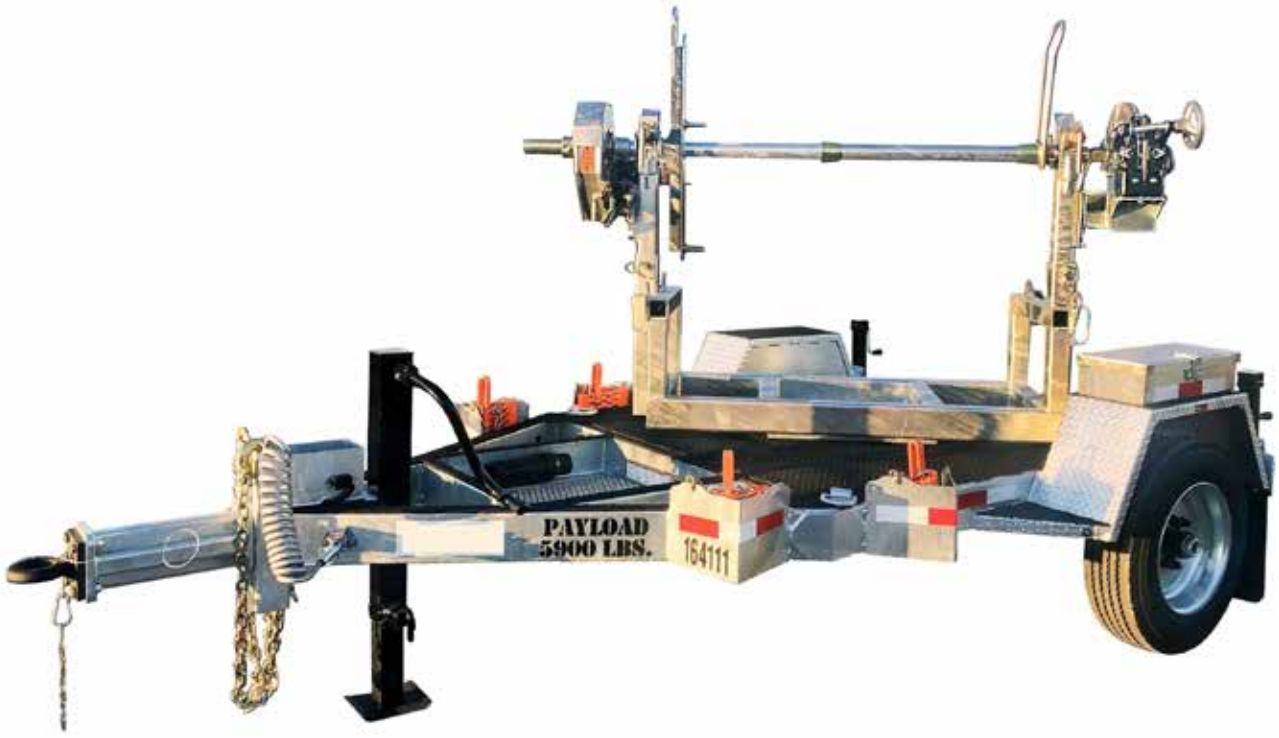

LOWEST TOTAL COST OF OWNERSHIP (TCO) FROM:

- **LIFETIME WARRANTY PINLESS POWERLOCK**™ Reel Bar Securement
- INDUSTRY LEADING 20" OVERSIZED TURRET BEARING
- 250K Axial, 90K ft/lbs Moment Load Lockable on 6 Degree Intervals
- OPEN TOP, "NON ENCAPSULATED" NYLATRON BEARING SADDLE (low-coefficient of friction). OPEN TOP = LESS FRICTION/LOW MAINTENANCE and EASIER PAY-OUT.
- No Pins or Cotters to Secure Reel Bar *(most critical safety point)*
- Yellow Zinc Electro-Plated and Stainless Precision Machined Components
- **PRACTICAL:** No Expensive, Unnecessary Bronze Components, yet we Don't Cut Corners and Provide Premium, Heavy Duty, Top-Quality Latches, Hardware, Fittings and Components.

BUILT FOR SAFETY. BUILT FOR SPEED. BUILT TO LAST.

CAPACITIES

- PL-1RT6: 9,200 lbs. GVWR @ 15% Tongue Weight
- PL-1RT6-56: 9,200 lbs. GVWR @ 15% Tongue Weight
- PL-1RT8: 11,050 lbs. GVWR @ 15% Tongue Weight
- PL-1RT8-DO: 13,800 lbs. GVWR @ 15% Tongue Weight
- PL-1RT8-DO-EXO 13,800 lbs. GVWR @ 15% Tongue Weight

AXLES

- PL-1RT6: 8K lbs. Torsion
- PL-1RT6-56: 8K lbs. Torsion
- PL-1RT8: 10K lbs. Sprung
- PL-1RT8-DO: 12K lbs. Sprung
- PL-1RT8-DO-EXO: 12K lbs. Sprung

WHEELS

- PL-1RT6: (2) 17.5 x 6.75 HC / 8 on 6.5 BC w/ 0.19 Inset
- PL-1RT6-56: (2) 17.5 x 6.75 HC / 8 on 6.5 BC w/ 0.19 Inset
- PL-1RT8: (2) 17.5 x 6.75 HC / 8 on 6.5 BC w/ 0.19 Inset
- PL-1RT8-DO: (2) 17.5 x 6.75 HC / 8 on 6.5 BC w/ 0.19 Inset
- PL-1RT8-DO-EXO: (2) 17.5 x 6.75 HC / 8 on 6.5 BC w/ 0.19 Inset

TIRES

- PL-1RT6: (2) ST-215/75R17.5 LR-H Tires
- PL-1RT6-56: (2) ST-215/75R17.5 LR-H Tires
- PL-1RT8: (2) ST-215/75R17.5 LR-H Tires
- PL-1RT8-DO: (2) ST-235/75R17.5 LR-H Tires
- PL-1RT8-DO-EXO: (2) ST-235/75R17.5 LR-H Tires

BRAKES

- PL-1RT6: 12.25” x 3.38” Electric w/ Safety Breakaway Kit
- PL-1RT6-56: 12.25” x 3.38” Electric w/ Safety Breakaway Kit
- PL-1RT8: 12.25” x 3.38” Electric w/ Safety Breakaway Kit
- PL-1RT8-DO: 12.25” x 5.00” Electric w/ Safety Breakaway Kit
- PL-1RT8-DO-EXO: 12.25” x 5.00” Electric w/ Safety Breakaway Kit

PAYLOAD: ALL FINAL PAYLOADS BASED ON CHOSEN MODEL AND OPTIONS

REEL WEIGHT (PAYLOAD)

- PL-1RT6: 6,200 lbs. Approx. (payload lowers as options chosen)
- PL-1RT6-56: 6,200 lbs. Approx. (payload lowers as options chosen)
- PL-1RT8: 8,000 lbs. Approx. (payload lowers as options chosen)
- PL-1RT8-DO: 8,000 lbs. Approx. (payload lowers as options chosen)

REEL WEIGHT (PAYLOAD) (cont.)

- PL-1RT8-DO-EXO: 8,000 lbs. Approx. (payload lowers as options chosen)

(ADDITIONAL WEIGHT OF OPTIONS REDUCES PAYLOAD)

REEL DIAMETER: Positions from 72", 84" to 96"

REEL WIDTH:

- PL-1RT6: 54" Max
- PL-1RT6-56: 56" Max
- PL-1RT8: 54" Max
- PL-1RT8-DO: 60" Max
- PL-1RT8-DO-EXO: 60" Max

REEL BAR DIA: 2.5"

LENGTH:

- PL-1RT6: 151" Approx.
- PL-1RT6-56: 151" Approx.
- PL-1RT8: 151" Approx.
- PL-1RT8-DO: 164.50" Approx.
- PL-1RT8-DO-EXO: 146" Approx.

WIDTH:

- PL-1RT6: 96" Approx.
- PL-1RT6-56: 98" Approx.
- PL-1RT8: 96" Approx.
- PL-1RT8-DO: 101.75" Approx.
- PL-1RT8-DO-EXO: 96" Approx.

CURB WEIGHT:

- PL-1RT6: 3,000 lbs. Approx.
- PL-1RT6-56: 3,000 lbs. Approx.
- PL-1RT8: 3,050 lbs. Approx.
- PL-1RT8-DO: 4,100 lbs. Approx.
- PL-1RT8-DO-EXO: 4,150 lbs. Approx.

Trailer Weight will Vary with Options & Finishes Chosen.

STANDARD FEATURES

- **PINLESS POWERLOCK™ LIFETIME WARRANTY**

VIRTUALLY ZERO MAINTENANCE Yellow Zinc Electroplated

STANDARD FEATURES (cont.)

- **INDUSTRY LEADING 20" OVERSIZED TURRET BEARING w/** 250K Axial, 90K ft/lbs Moment Load Lockable on 6 Deg. Intervals
- **OPEN TOP, "NON ENCAPSULATED" NYLATRON** BEARING SADDLE (low-coefficient of friction). OPEN TOP = LESS FRICTION/LOW MAINTENANCE and EASIER PAY-OUT. (Haven't Replaced a Saddle in 14 Years)
- Oil Bath Hubs (Greaseable Option All)
- Electric Brakes
- Wheel Chock Holders
- Removable Turrets to Turn Trailer into Flatbed, if Needed.

-Three (3) POINT STEPS AND HANDHOLDS STANDARD

STANDARD TRAILER BODY

- Heavy Duty 6” X 3” X ¼” Frame
- 6-Position Adjustable Hitch (PL-1RT6, PL-1RT6-56, PL-1RT8, PL-1RT8-DO-EXO)
- 4-Position Adjustable Hitch (PL-1RT8-DO)
- ⅜” X 36” GR70 Yellow Zinc Safety Chains with Hooks
- 12,000 lbs. Static Front Jack w/ Spring Return
- Ground Lug: Copper Alloy Star Washer Bolted to Frame (Welded Optional)
- Fenders: ⅛” Fabricated Diamond Plate
- (2) Rear 8,000 lbs. Static Stabilizer Jacks

WIRING

- DOT / ICC-- FMVSS / CMVSS Approved LED ULTRA- HIGH VISIBILITY 180 DEGREE BULLET Marker and Clearance Lights
- LED Sealed Beam Rubber Mounted Stop, Turn, Tail and Marker Lights
- Breakaway Kit with Absorbed Glass Mat (AGM) Battery
- 100% Sealed Heat-Shrinked Wiring Connections w/ Full Loom
- FULLY PROTECTED 7 or 6 Way Female Plug acts as Junction Box Recessed in FRAME RAIL. No Easily Damaged Plastic Junction Boxes

PAINT

- I.M.P.A.C.T Intense Metal pH Acid Surface Prep (Superior to sandblasting that can infuse metal w/ oil)
- Seams Caulked
- Rust Preventative 2-Part Epoxy Primer
- Two-Part Polyurethane Topcoats (2 topcoats)
- Standard Colors: White and CAT Yellow (Custom Available)
- Ten (10) Year Galvanized Structural Warranty (2-Year Painted)

OPTIONS

- 13 HP HONDA Engine Hydraulic Power Pack Comes STANDARD w/ ENGINE COVER, 15 Gallon Reservoir, Replaceable Oil Filter, Pressure Gauge and Solar Fade Resistant Plastic Control Placard. (Electric Start Optional)
- 3,300 ft/lbs Torque Hydraulic Take-up Retriever. (Motor Spooled w/ Reel Brake ILO Cross-Over Relief Valve for Smooth Instant Reel Stoppage)
- 2-7/16" Universal Adapter for Capstan and Power Reel Attachments
- Hydraulic Hose Rotary Swivel Union *(manages & eliminates loose hydraulic hoses)*
- 7 Inch General Purpose Capstan
- Collapsible Power Reel
- Auxiliary Hydraulic Quick-Connect Ports
- 16" Bronze Alloy Ventilated Reel Brake
- 9" Stainless Steel Overspin Brake
- 16" Long 6-Bolt Hitch Extension (w/ 52" Safety Chains and Breakaway Cable Extension)
- 3" Lunette Eye
- Rotating Arbor Ground
- All Stainless Steel Fasteners (½" and under)
- Anti-Skid/Anti-Glare Sand Paint on all Walking Surfaces
- Various Trailer Light Plugs (Customer Choice)
- Aluminum or Steel Toolbox
- Air Brakes w/ ABS
- Wiring Connections Soldered and Sealed w/ Heat Shrink Tubing
- Plug-and-Play Sealco Wiring Harness
- Wheel Chocks: Rubber or All Weather Galvanized Grip Strut
- Spare Tire and Mount
- Solar Charged Breakaway Kit
- Strobe Warning Lights
- Hydraulic Front Jack
- Hydraulic Rear and Intermediate Outriggers
- Telescoping Rear and Intermediate Outriggers
- Truck-Lite Lighting
- Lug Nut Indicators

OPTIONAL PREMIUM ROLLER PACKAGE

- OVD Fairlead Rollers (One "1" Per Turret)
- URD Fairlead Rollers (Two "2" Per Turret)
- OVD/URD Cable Gathering Windows
- URD Arching/Traversing Fairlead

OPTIONAL ECONOMY ROLLER PACKAGE

- OVD Fairlead Rollers (One "1" Per Turret)
- URD Fairlead Rollers (Two "2" Per Turret)

OPTIONAL ECONOMY ROLLER PACKAGE (cont.)

- OVD/URD Cable Gathering Windows
- URD Cable Gathering Window

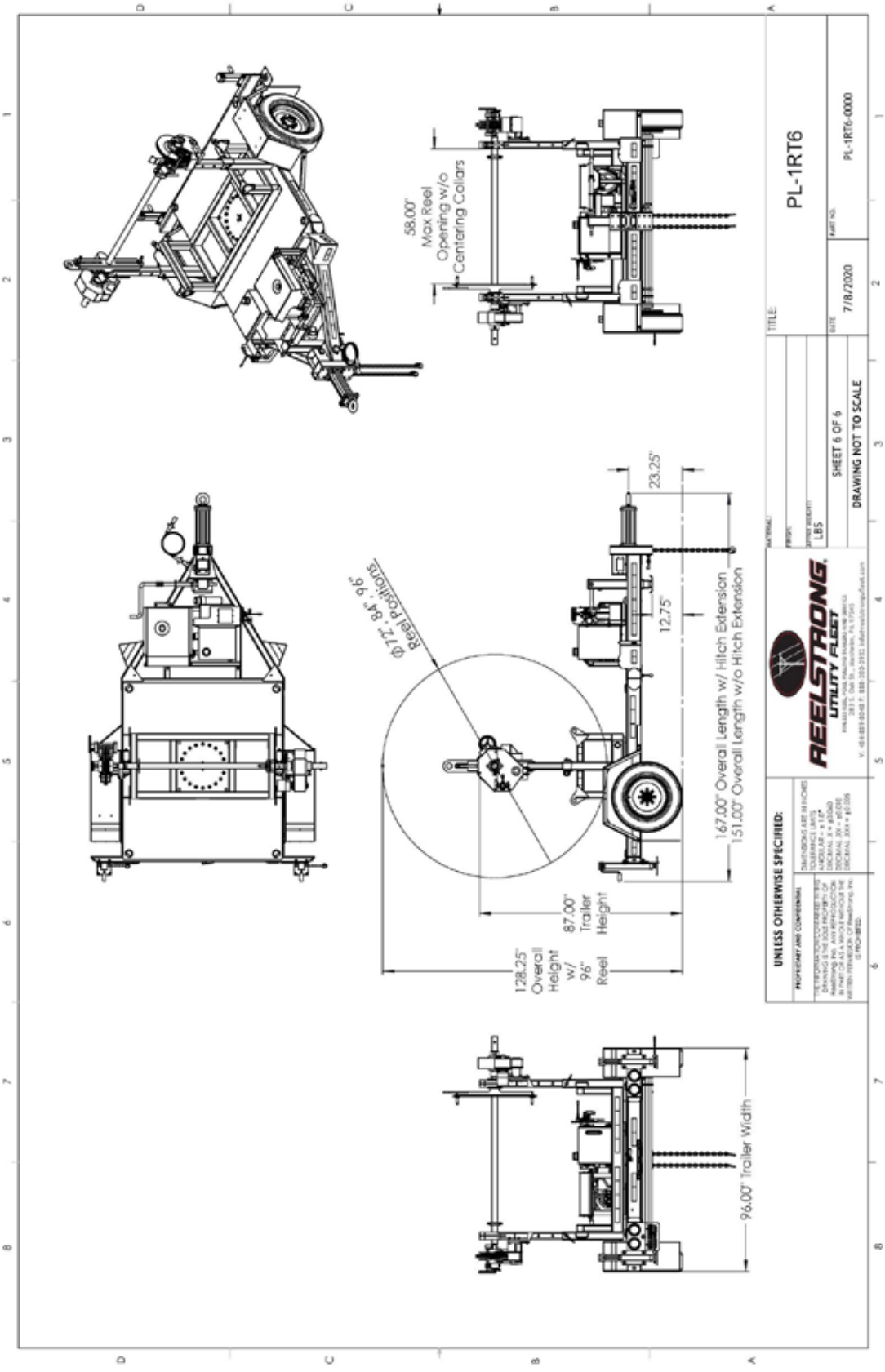
58.00"
Max Reel
Opening w/o
Centering Collars
Ø72", 84", 96"
Reel Positions
23.25"
12.75"
167.00" Overall Length w/ Hitch Extension
151.00" Overall Length w/o Hitch Extension
87.00"
Trailer
Height
128.25"
Overall
Height
w/
96"
Reel
96.00" Trailer Width
UNLESS OTHERWISE SPECIFIED:
REELSTRONG
UTILITY FLEET
LBS
SHEET 6 OF 6
DRAWING NOT TO SCALE
TITLE:
PL-1RT6
7/8/2020
PL-1RT6-0000

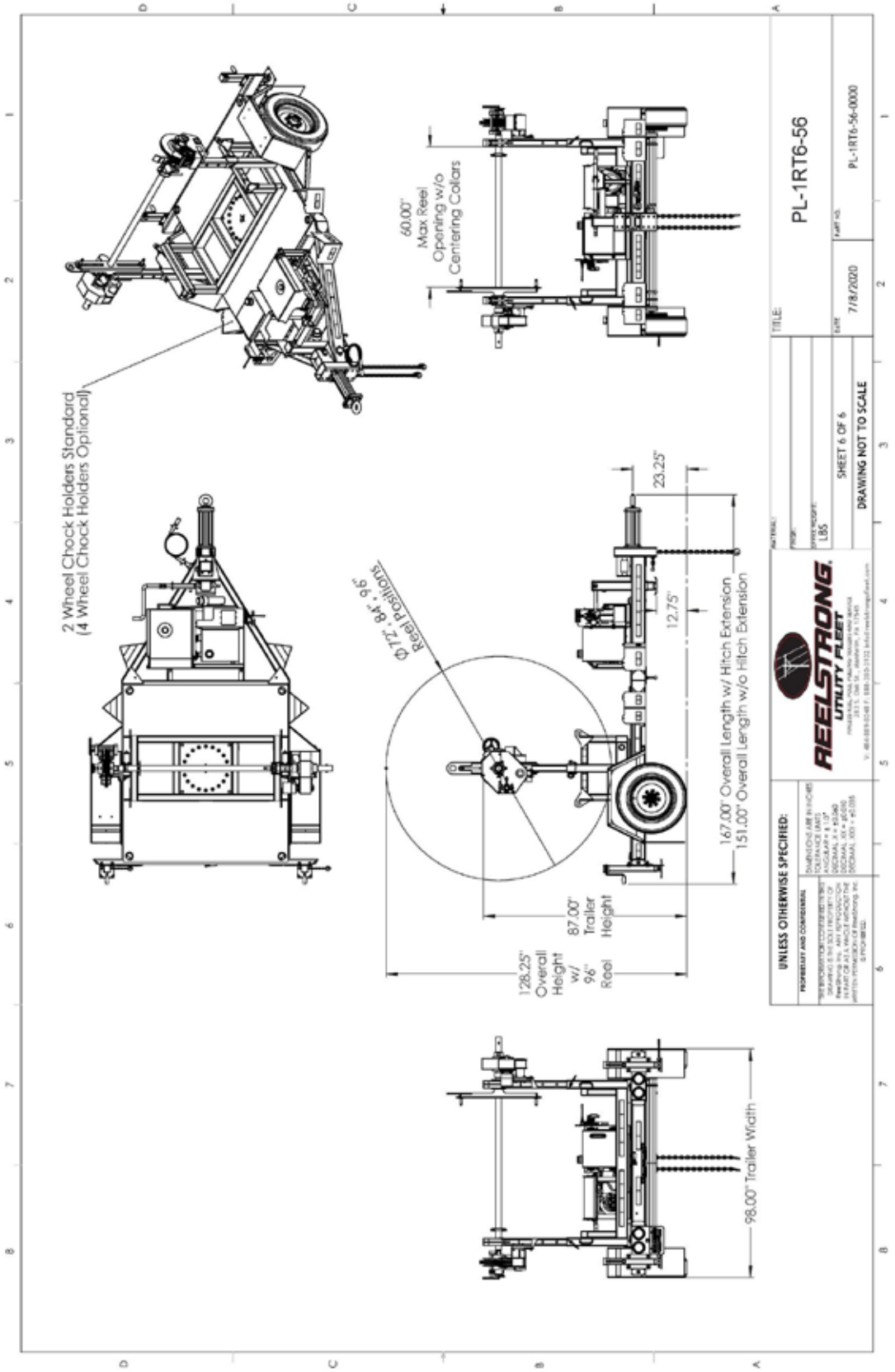
2 Wheel Chock Holders Standard
(4 Wheel Chock Holders Optional)
60.00"
Max Reel
Opening w/o
Centering Collars
Ø72", 84", 96"
Reel Positions
23.25"
12.75"
167.00" Overall Length w/ Hitch Extension
151.00" Overall Length w/o Hitch Extension
87.00"
Trailer
Height
128.25"
Overall
Height
w/
96"
Reel
98.00" Trailer Width
UNLESS OTHERWISE SPECIFIED:
REELSTRONG
UTILITY FLEET
TITLE:
PL-1RT6-56
PL-1RT6-56-0000
7/8/2020
SHEET 6 OF 6
DRAWING NOT TO SCALE

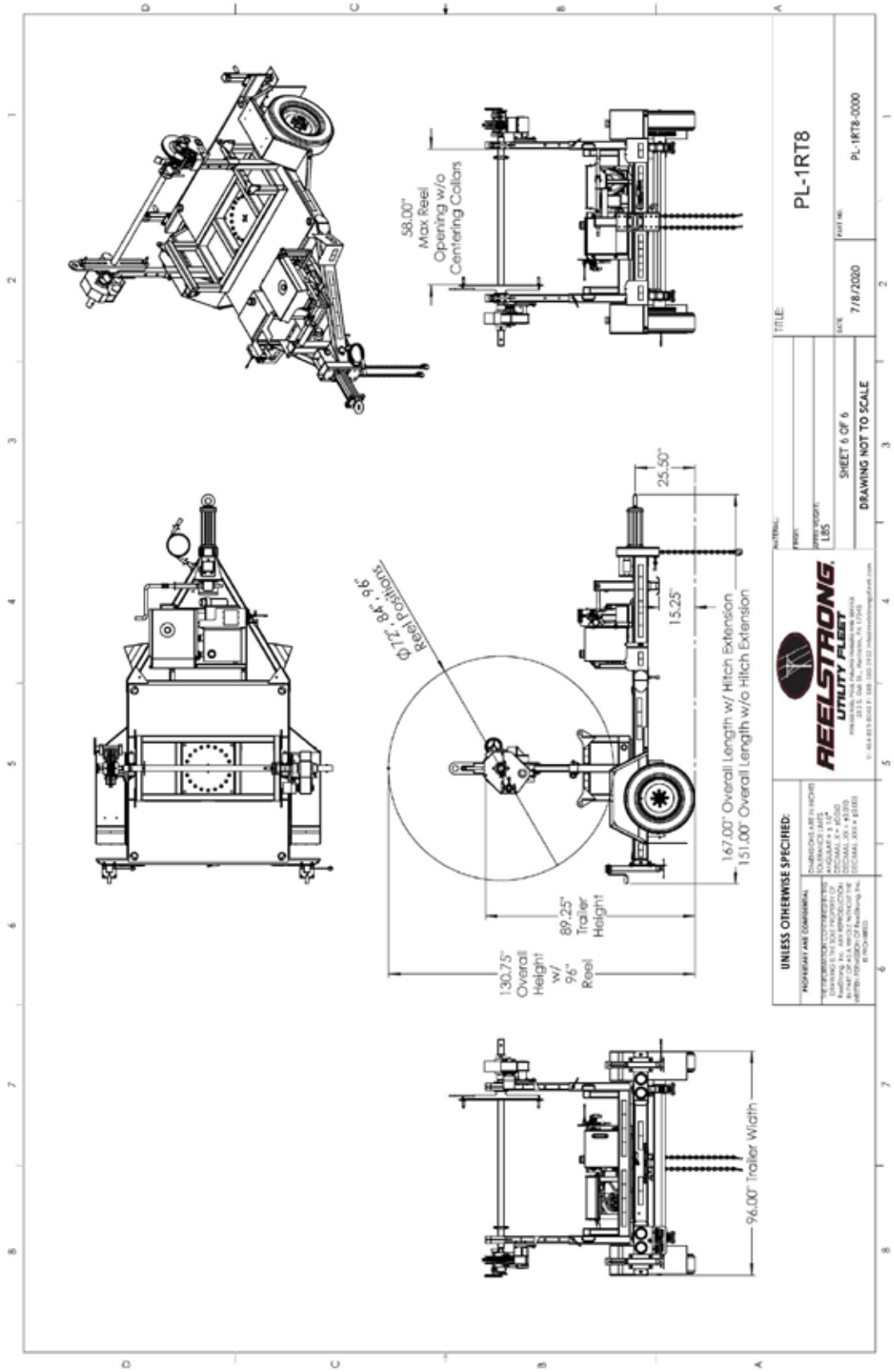
58.00"
Max Reel
Opening w/o
Centering Collars
25.50"
15.25"
Ø72", 84", 96"
Reel Positions
167.00" Overall Length w/ Hitch Extension
151.000" Overall Length w/o Hitch Extension
89.25"
Trailer
Height
130.75"
Overall
Height
w/
96"
Reel
96.00" Trailer Width
PL-1RT8
7/18/2020
PL-1RT8-0000
SHEET 6 OF 6
DRAWING NOT TO SCALE
UNLESS OTHERWISE SPECIFIED:
REELSTRONG
UTILITY FLEET

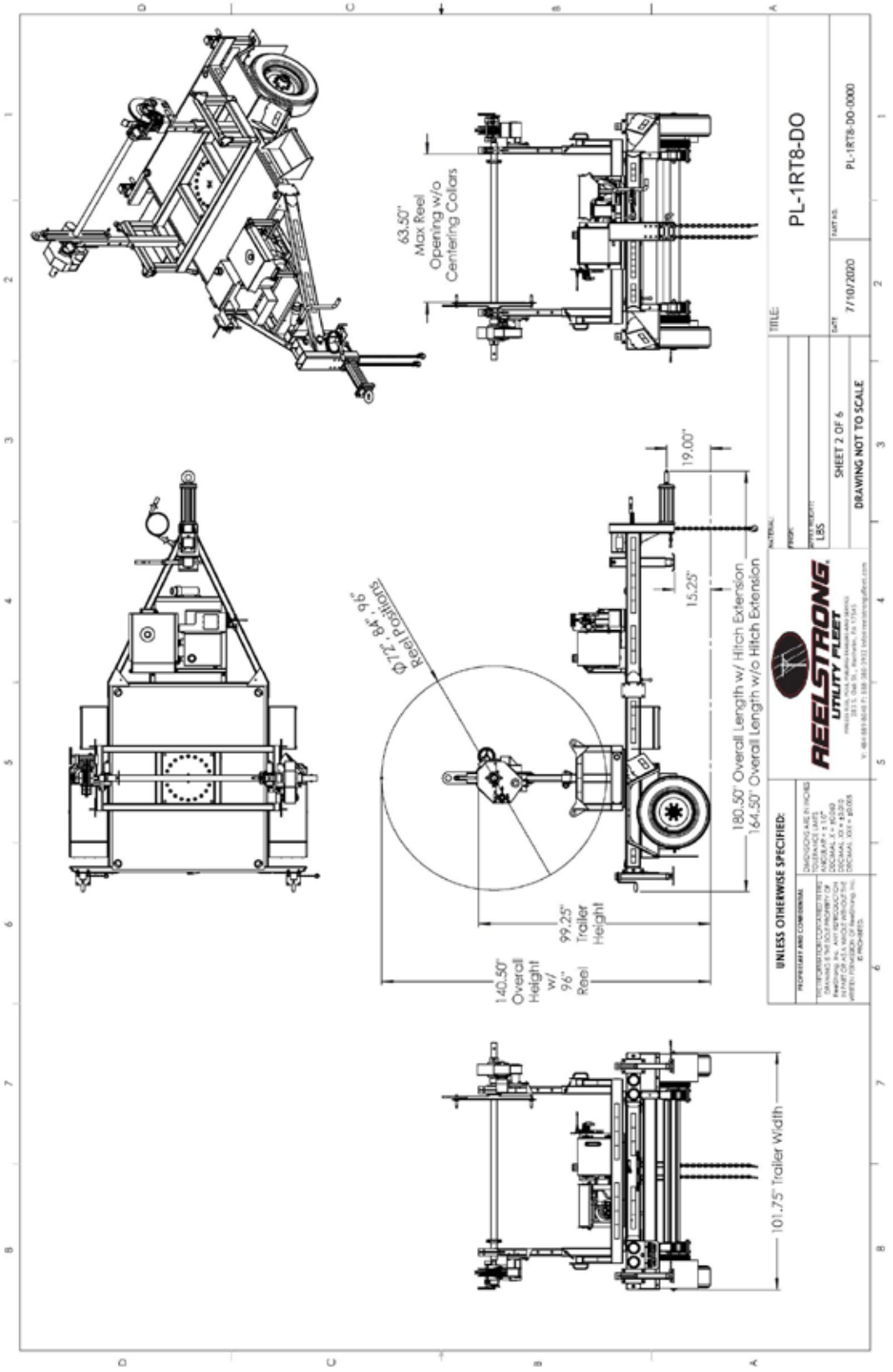
63.50"
Max Reel
Opening w/o
Centering Collars
19.00"
15.25"
Ø72", 84", 96"
Reel Positions
180.50" Overall Length w/ Hitch Extension
164.50" Overall Length w/o Hitch Extension
99.25"
Trailer
Height
140.50"
Overall
Height
w/
96"
Reel
101.75" Trailer Width
UNLESS OTHERWISE SPECIFIED:
REELSTRONG
UTILITY FLEET
TITLE:
PL-1RT8-DO
SHEET 2 OF 6
DRAWING NOT TO SCALE
7/10/2020
PL-1RT8-DO-0000

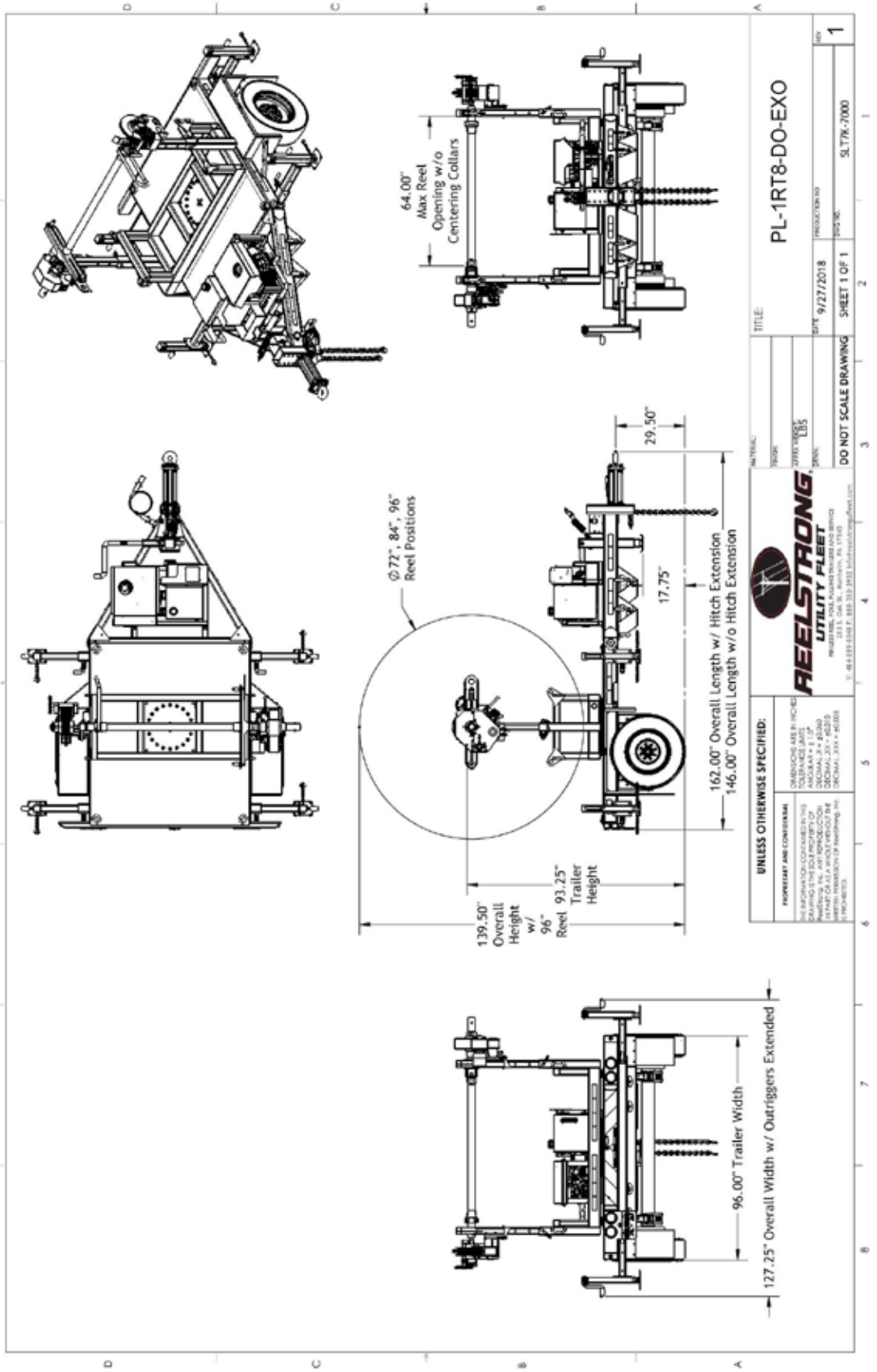
64.00"
Max Reel
Opening w/o
Centering Collars
29.50"
17.75"
Ø72", 84", 96"
Reel Positions
162.00" Overall Length w/ Hitch Extension
146.00" Overall Length w/o Hitch Extension
139.50"
Overall
Height
w/
96"
Reel
93.25"
Trailer
Height
96.00" Trailer Width
127.25" Overall Width w/ Outriggers Extended
PL-1RT8-DO-EXO
DO NOT SCALE DRAWING
SHEET 1 OF 1
9/27/2018
SLT7K-7000
UNLESS OTHERWISE SPECIFIED:
REELSTRONG
UTILITY FLEET