I50 SIDE VIEW DIAGRAM

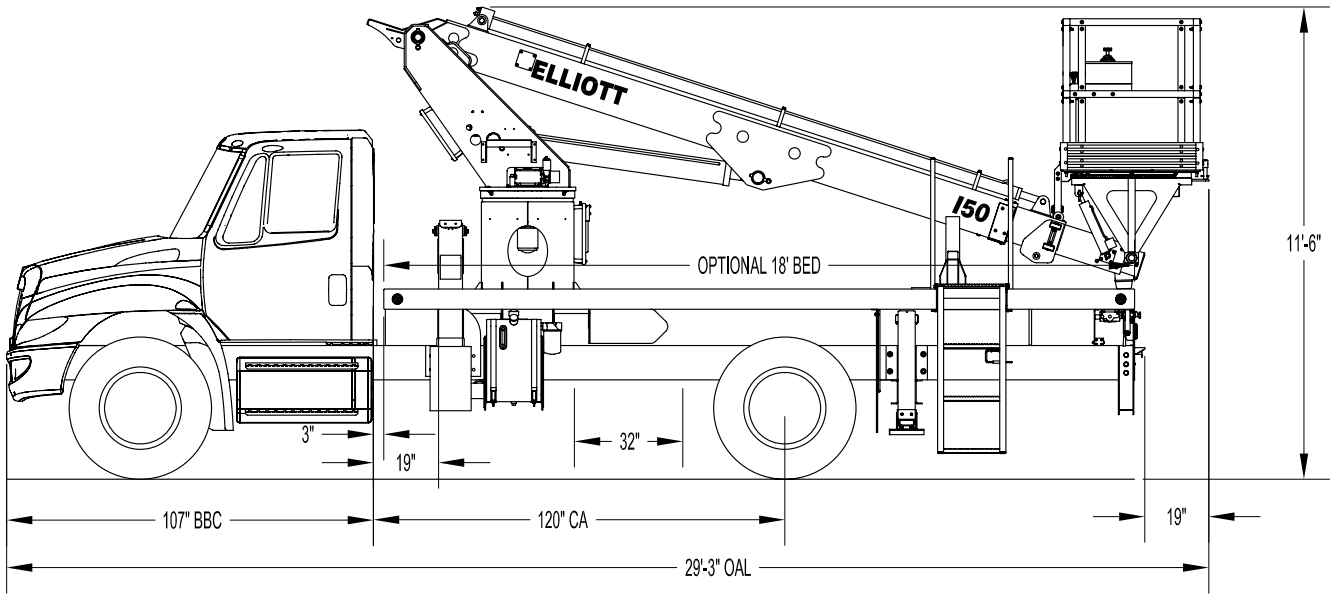

• **Working Height**	55' / 16,8 m
• **Working Side Reach**	40' / 12,2 m
• **Platform Capacity**	600 lbs / 272 kg
• **Platform Size**	40”x 60” / 102 x 152 cm
• **Platform Type**	Insulated Top-Mount
• **Lifting Capacity (Main Winch)**	3,650 lbs / 1656 kg
• **Insulation Rating**	46kV Category C

• **Powered Boom Sections**	3
• **Overall Height**	11’6” / 3,4 m
• **Unit Weight (Bare)**	11,500 lbs / 5216 kg
• **Outrigger Spread Main**	12'6” / 3,8 m
• **Outrigger Spread Auxiliary**	8’ / 2,4 m
• **Front Gross Axle Weight Rating**	10,000 lbs / 4536 kg
• **Rear Gross Axle Weight Rating**	19,000 lbs / 8618 kg

TECHNICAL SPECIFICATIONS

Maximum Platform Height: 50' ground to platform floor.

Working Range: 55' max. working height and 40' max. side reach.

Work Platform: 40”x60" insulated top-mounted work platform with 40" high fiberglass rails. and a grated fiberglass floor Equipped with two safety lanyard attachment loops and two safety harnesses and 72" lanyards. Platform capacity 600 lbs.

Platform Leveling System: Hydraulic "closed" system consisting of twin platform cylinders interacting with a boom-actuated master cylinder mounted in boom support turret. System provided with factory-set relief valves to compensate for oil expansion or overload during platform leveling operation. Remote releveling controls provided in platform and at ground controls to give precise releveling capability.

Platform Controls: Control signals to be transmitted into work platform via plastic fiberoptic “light conduction” from turret control station. Fiberoptic system powered by battery with a backup located in truck cab with 12-volt charger. Single joystick control with finger enable switch in platform to provide boom extension, elevation and rotation controls. Control cable shall extend through the column to the cable carrier and through a fiberglass tube in boom sections. Lower boom controls shall include all general control options including engine speed, start/stop, and upper controls with override.

Lower Controls: Mounted on curbside of turret.

Outrigger Controls: Parallel open-center stack valve for lever-operated control of right and left outriggers. The outrigger valves are mounted at the rear, under each corner of the bed with roadside valve controlling roadside outriggers and curbside valve controlling curbside outriggers.

Outriggers: "A” type out-and-down main outriggers with 12’ spread. "A" type underslung secondary outriggers with 8’ spread.

Frame: One piece, all welded, box-type fabrication with integral outrigger mounts.

Turret: Reverse offset turret is one-piece weldment mounted on turret box. Turret rotates on large diameter ball bearing.

Rotation: Continuous turret rotation with no stops. Hydraulic motor drives turret through self-locking gear box.

Boom: Steel rectangular tube sections and one fiberglass section 9” high x 7” wide with a 3/4” wall section. Assembly includes heavy-duty cylinder fittings, pivot pins, and replaceable wear pads.

Boom Extension: Two opposing “piggyback” extension cylinders extend the boom sections.

Lift: One single-acting full displacement, long stroke cylinder, provides smooth and stable boom elevation. Holding valve prevent boom from falling in event of hose failure.

Cylinders: All cylinders use microhoned cylinder tubing, chrome shafts, top grade packing and protective rod wipers. Cylinder-mounted holding valves provided on all load-holding cylinders.

Hoses: All high pressure hoses are wire braid reinforced with a minimum safety factor of 4 to 1.

Oil Tank Capacity: 35 gallon mounted to truck frame on roadside.

Hydraulic System: Operating pressure approximately 2,500 PSI. System is parallel open center type and is equipped with liquid-filled pressure gauge. Oil is supplied to upper cylinders through hydraulic union in center of turret to cable carrier along side of the boom.

Pump: Gear type, direct mount to truck PTO.

PTO: Heavy-duty, high-speed.

Cab Equipment: PTO switch with indicator lights installed in truck cab. Engine speed control and start/stop installed with control switches in platform remote control box and also located at lower controls. U/L approved 5:BC dry chemical fire extinguisher installed in truck cab.

Operators Manual & Video: Two CDs and one printed copy of operation, maintenance, safety and parts manual provided with each unit. Operational and safety video provided at delivery.

Installation: Unit installed on truck, painted, system and tank filled with oil, tested, inspected, and ready to operate.

Standard Paint: Paint boom and turret red, outriggers red, and bed and boxes black. Top of bed painted with black nonskid surface.

Bumper: Bureau of Motor Carrier Safety rear bumper.

Weight: Approximately 11,500 lbs. with 18' steel-floor bed less truck.

Truck Chassis Required: Approx. 120" C.A., RBM 900,000 in-lb. per rail, 10,000 lb. front axle and 25,999 lb. GVWR required. Trucks must have increased cooling, heavy-duty front and rear springs, 12V electrical system with high capacity alternator, cab clearance stop/tail/backup lights, and I.D. lamps. Recommended GVWR is minimum for HiReach with flatbed only. Contact factory when additional equipment is to be added.

Options:

3,650 or 2,000 lb Capacity Boom Winch

500 lb Capacity Platform Jib Attachment

Much More...

Elliott Equipment Company reserves the right to change the specification of any unit at any time without prior notice. This brochure is only a statement of general specifications on the date of this publication. For more detailed info on specific Elliott trucks go to www.elliottequip.com

MAXIMUM WORKING LOADS - JIB WINCH

MAXIMUM WORKING LOADS
PLATFORM JIB OPERATION
MODEL I50

TOTAL PLATFORM CAPACITY (JIB LOAD PLUS PERSONNEL)

USE OUTRIGGERS AT ALL TIMES • AVOID JERKING LOAD

360° RADIUS

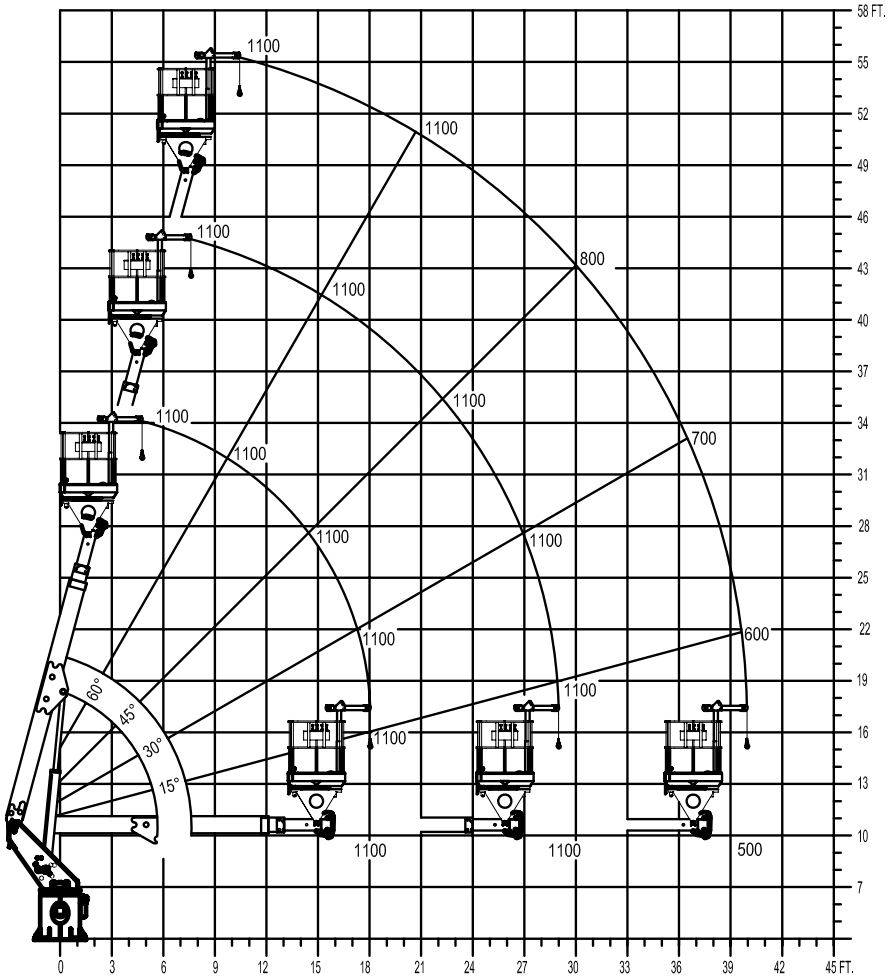

JIB 500 LBS. MAX PERSONNEL 600 LBS. MAX

ELLIOTT
EQUIPMENT COMPANY

1132950 080107

MAXIMUM WORKING LOADS - MAIN WINCH

MAXIMUM WORKING LOADS
MATERIAL HANDLING OPERATION

MODEL I50

WINCH LINE LOAD (POUNDS) WITH BUCKETS OR PLATFORM REMOVED

USE OUTRIGGERS AT ALL TIMES • AVOID JERKING LOAD

360° RADIUS

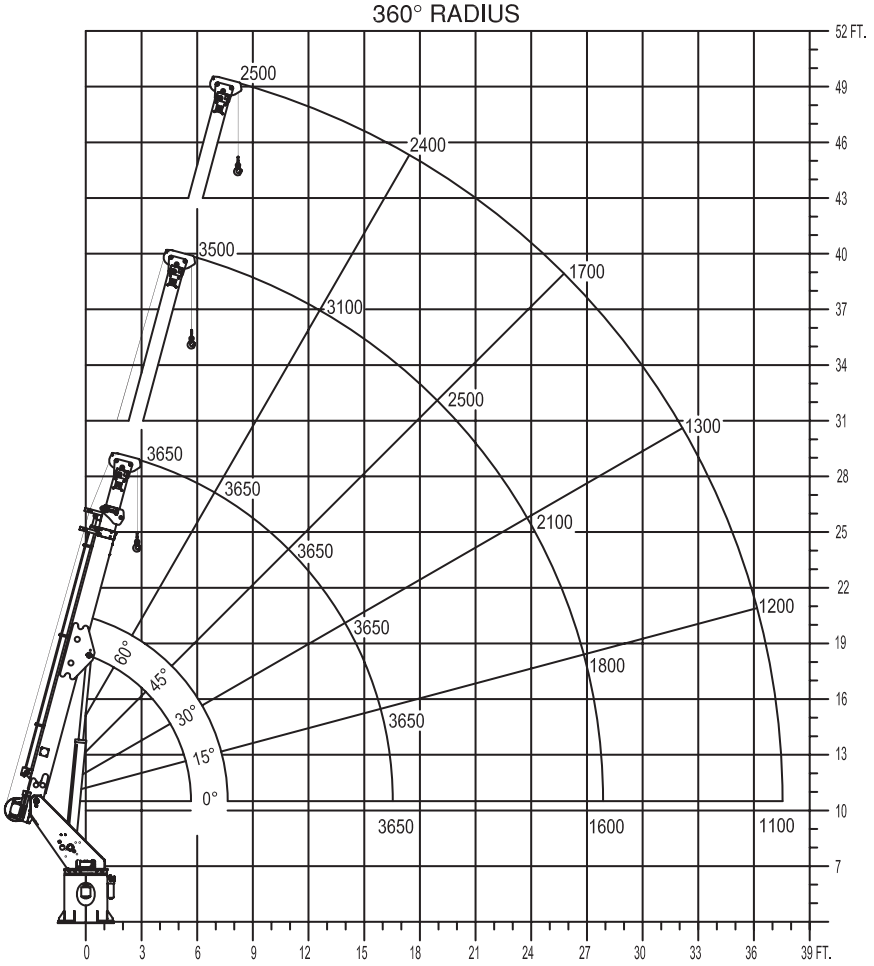

DEDUCT 400 POUNDS WITH BUCKETS OR PLATFORM ATTACHED

ELLIOTT
EQUIPMENT COMPANY

DO NOT PAINT OVER ANY LABELS

1076030 042604

CHASSIS DATA

	I50
Wheelbase (WB)	187” / 475 cm
Cab to Axle (CA)	120” / 305 cm
Cab to End of Frame (EOF	220” / 559 cm
Frame Section Modulus	9.0 in3 / 110,000 psi
Front Axle Gross Weight Rating	10,000 lb / 4536 kg
Rear Axle Gross Weight Rating	19,000 lb / 8618 kg
Extended Front Frame	Not Required

Chassis data is minimum general requirements-not for engineering.
Actual dimensions and truck data will depend on truck selection and axle configuration.

OPTIONS

Radio Remote Control
Interference protected radio remotes hard-wired to the platform let you get closer to your work and have full control over your machine.

Material Handling Jib
Equip your HiReach platform with a material handling jib winch to handle up to 500 pounds from within arm’s reach..

MH Outriggers With Shortjacking
Reduce outrigger spread with MH outriggers behind the cab and Elliott’s Automatic Safety Rotation Lockout to operate your HiReach in confined spaces.

Outrigger Pad Holders
Outrigger pad holders safely store your pads for travel and leave plenty of room for tool boxes.

Bed Accessories
Mount a wide variety of tool accessories including welders, power washers, and generators on the bed with lines to the platform.

Platform Accessories
Choose from a list of platform accessories including 110V outlets, welding leads, hydraulic tools, and much more.

Outrigger Extensions
Our pin-on outrigger extensions give you extra clearance for work on hills and around guardrails.

Line Body
Let us work with you to customize a line body to secure your tools and supplies the the best way for your application.